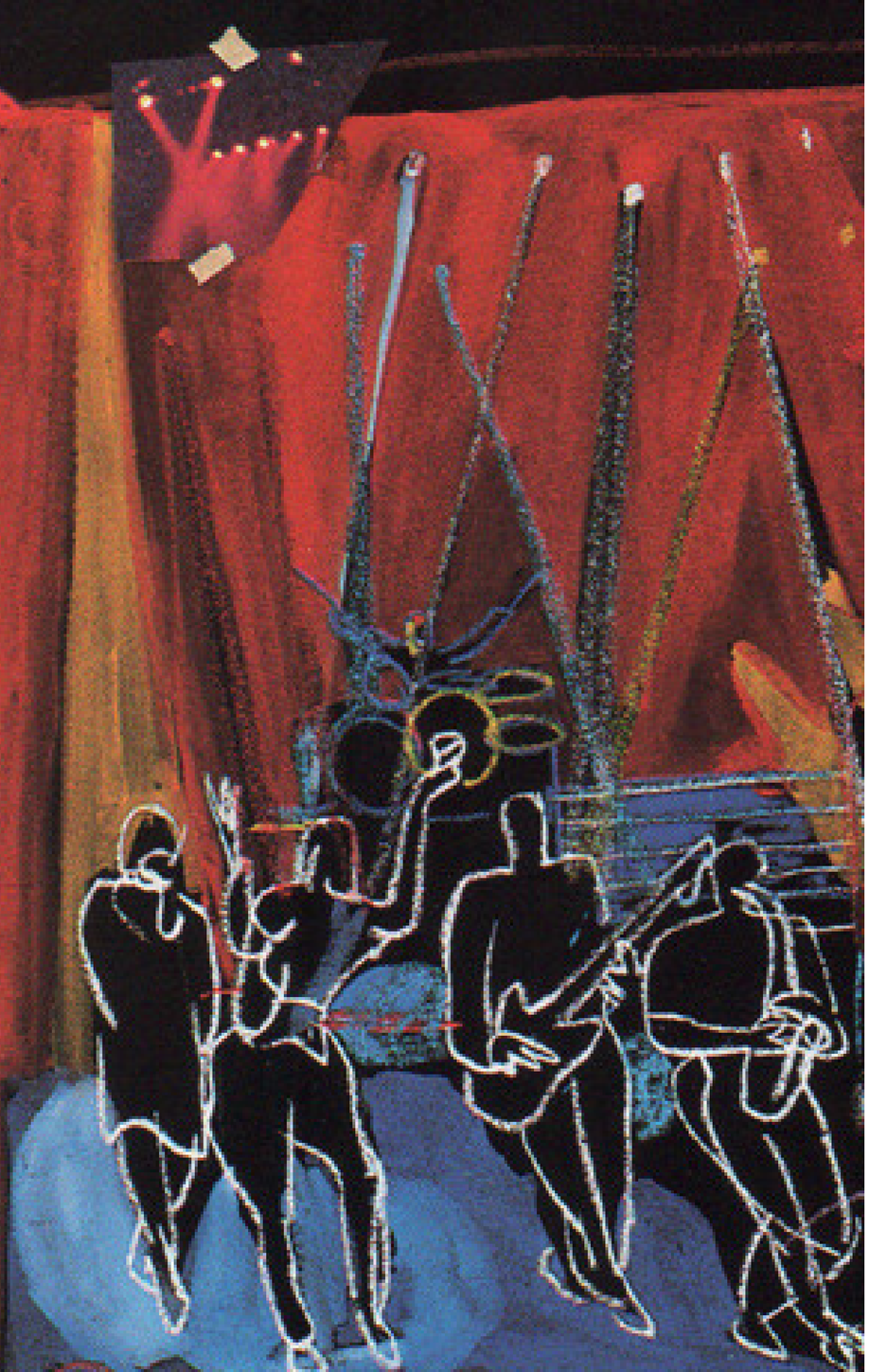

PHY-141

Decibel Scale

Luis Anchordoqui

Outline

- The human ear can detect sounds ranging from a pin drop to a roaring jet, a trillion-fold difference in power

- The decibel scale compresses this enormous range into a manageable set of numbers (typically 0 to 140) that matches our biological perception

- In today's, we will break down the decibel scale

Loudness

- As previously noted, the human ear possesses remarkable sensitivity, with the threshold of hearing for a young, healthy ear starting at a physical intensity of $1 \times 10^{-12}\ \mathrm{W/m^2}$
- While this physical measure is known as Sound Intensity (I), loudness is typically expressed in Sound Intensity Level (L), measured in decibels (dB), primarily because human perception of sound is not linear
- Our ears do not perceive a doubling of physical intensity as *twice as loud*
- Generally, the sound intensity must increase about tenfold before it is perceived as twice as loud (a rule of thumb that varies by frequency)
- If physical sound intensity $(\mathrm{W/m^2})$ were used, the scale would need to span over 14 orders of magnitude (from 1 to $100{,}000{,}000{,}000{,}000$) to cover the range from the faintest to loudest sounds

This sounds louder but not TWICE as load as this

Intensity Vs. Loudness

- The decibel scale is preferred because it is logarithmic and compact ($0\ \mathrm{dB}$ to $140\ \mathrm{dB}$ for the same range), closely aligning with our perception of loudness

- Therefore, you can consider sound intensity as the objective physical measurement, and the decibel level as the subjective, psychological measure of loudness

Intensity level (dB)	Intensity ($\mathrm{W\ m^{-2}}$)
compararison of the sound energy of a noise with that of one just detectable at the threshold of hearing	absolute measurement of the sound energy incidente on an área in a given time

Sound Intensity Level

- The equation that relates sound intensity to sound intensity level is given by ☛ $L = 10 \log_{10} \frac{I_2}{I_1}$

  where L is the number of decibels I_2 is greater than I_1, I_2 is the higher sound intensity being compared, and I_1 is the lower sound intensity being compared

- In other words, the decibel is a dimensionless unit (one-tenth of a bel) representing the base-10 logarithm of a ratio of intensity levels

- Keep in mind that intensity (I) is measured in $\mathrm{Watts/meter}^2$ ($\mathrm{W/m}^2$), representing the raw power of sound

- The L in the formula represents the decibel difference between two sounds

- Typically, I_1 is set to the threshold of human hearing

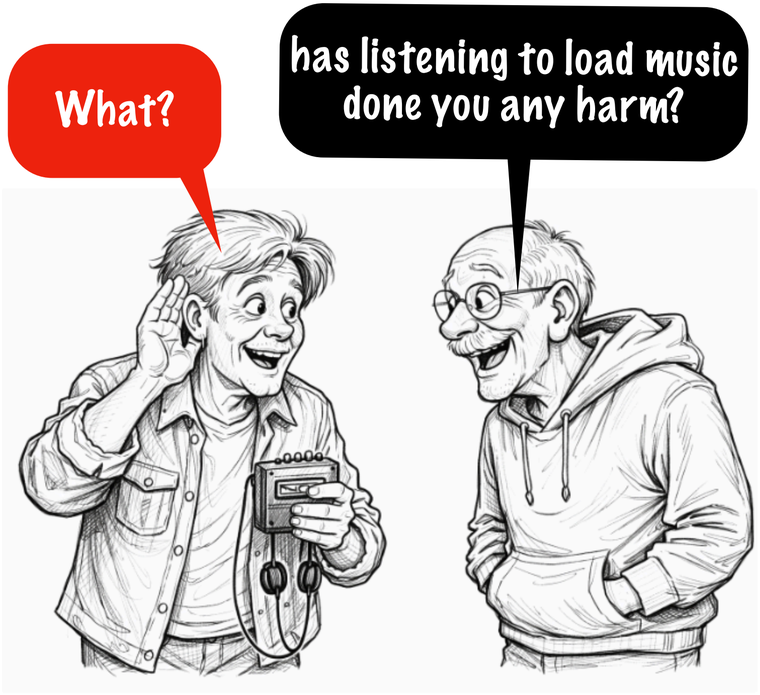

Noise Levels

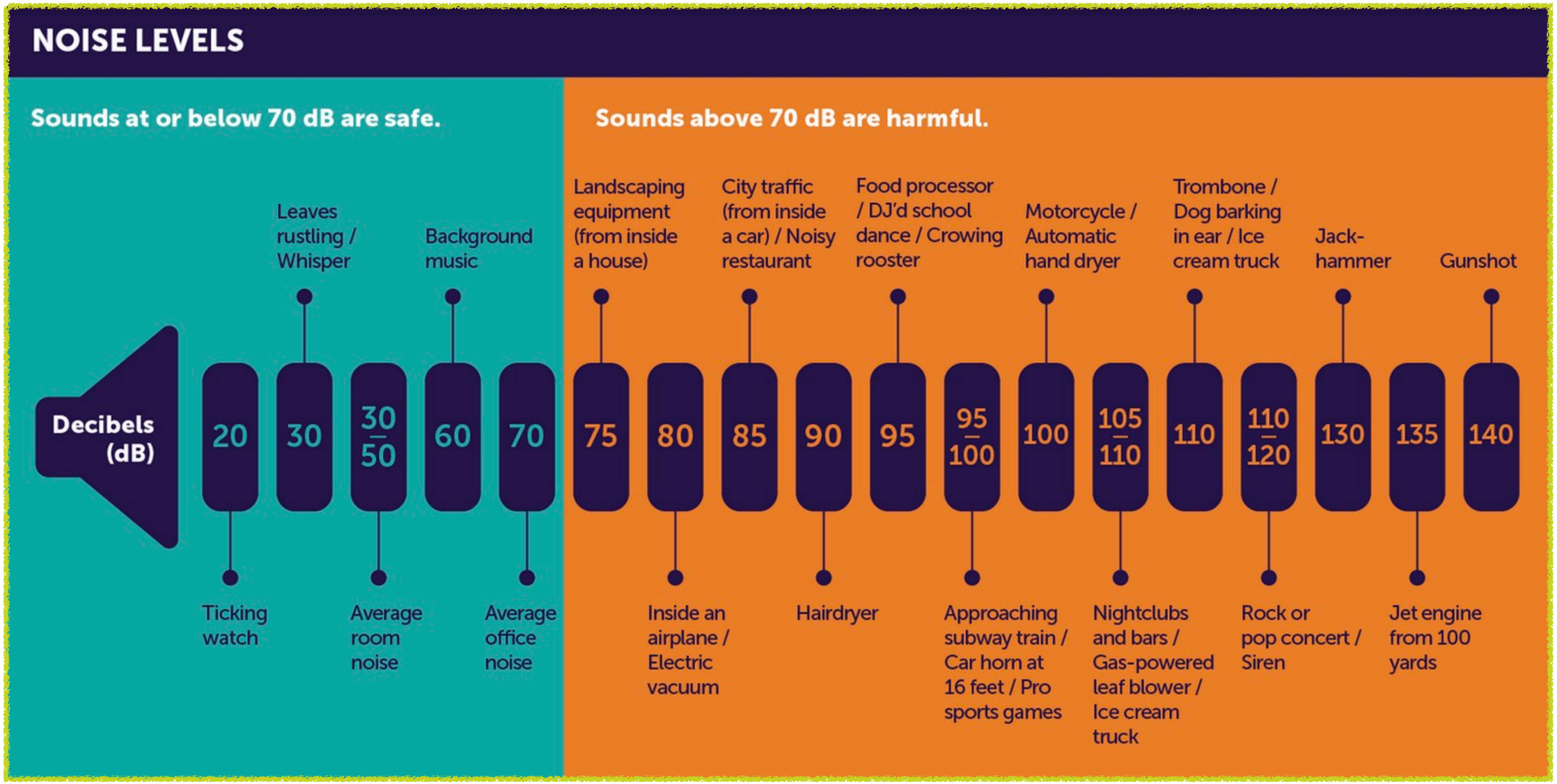

More Common Examples

- Common decibel measurements (such as $20\ \mathrm{dB}$ for a whisper, $80\ \mathrm{dB}$ for traffic, or $105\ \mathrm{dB}$ for a loud cheer) are measured relative to this faint baseline (e.g., $80\ \mathrm{dB}$ means $80\ \mathrm{dB}$ above the threshold)

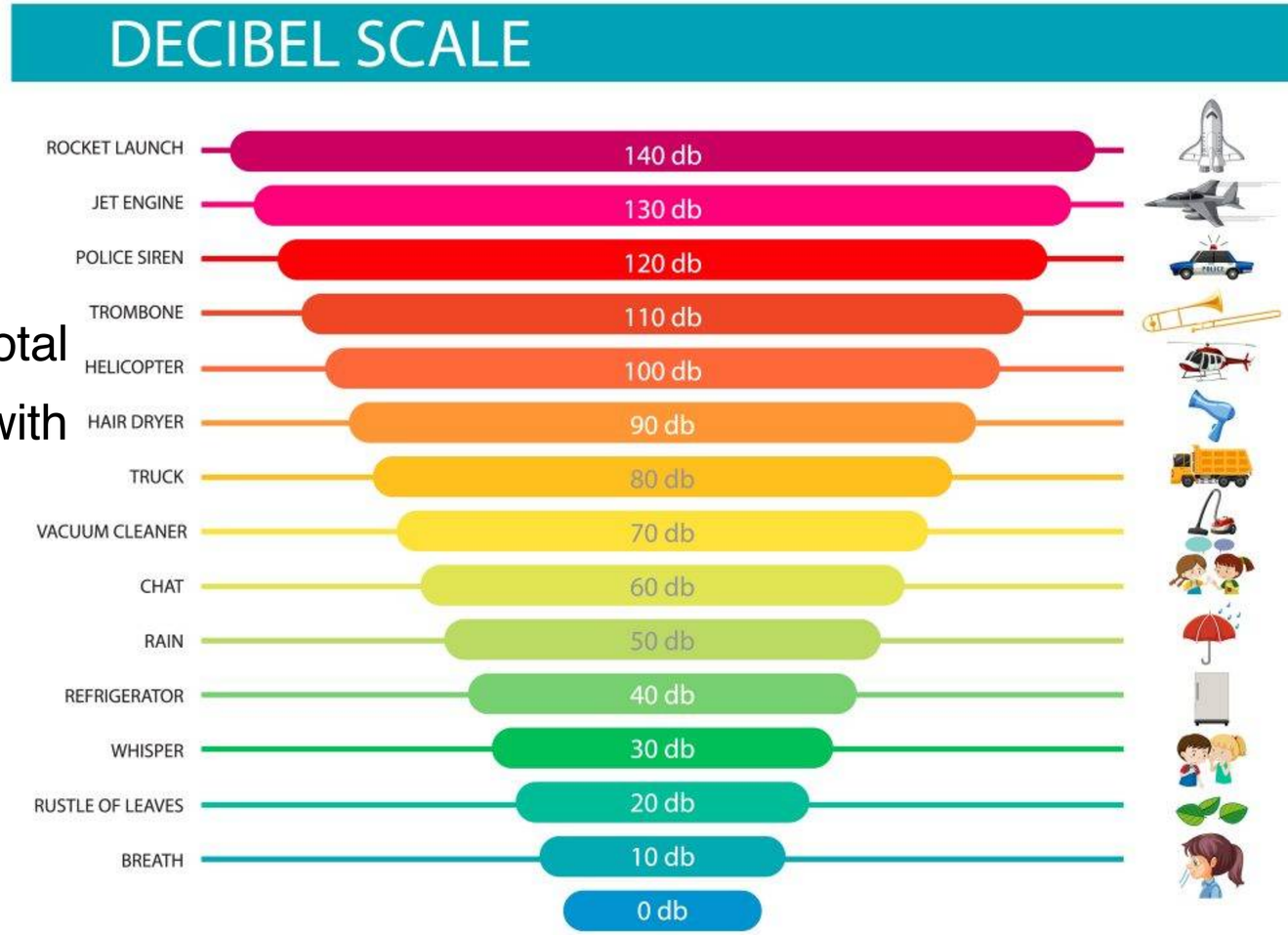

- It is important to note that $0\ \mathrm{dB}$ does not indicate total silence, but rather the quietest sound a human with perfect hearing can detect

How Distance Affects Intensity

- Sound intensity is significantly affected by your distance from the source; a whisper audible at one meter becomes entirely lost across a football field
- The reason for this is that sound energy radiates outward in all directions, forming an expanding sphere, with a surface $= 4\pi r^2$
- At one meter, that energy is concentrated on a small area of $4\pi\ \mathrm{m}^2$
- By two meters, the same amount of power must cover $16\pi\ \mathrm{m}^2$, which is four times the area

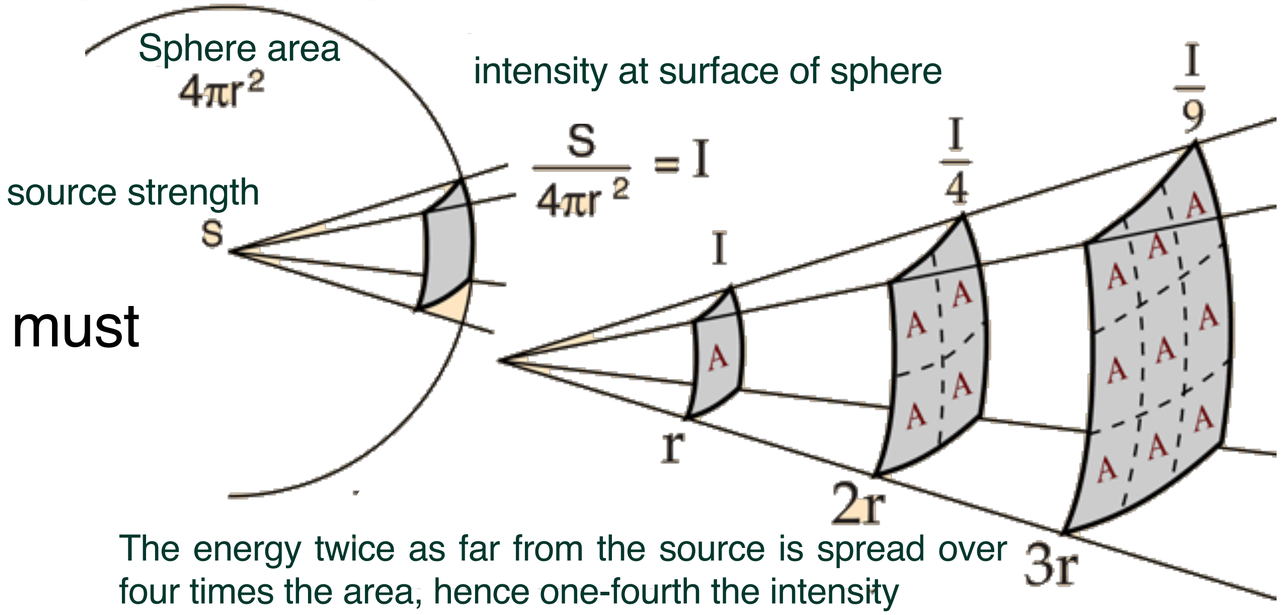

The energy twice as far from the source is spread over four times the area, hence one-fourth the intensity

How Distance Affects Intensity (cont'd)

- Because the same energy is spread over a larger area, the intensity at two meters is only one-quarter of the original strength

- Similarly, at three meters, the area covered is nine times larger $(36\pi\ \mathrm{m}^2)$, making the intensity only one-ninth of the original

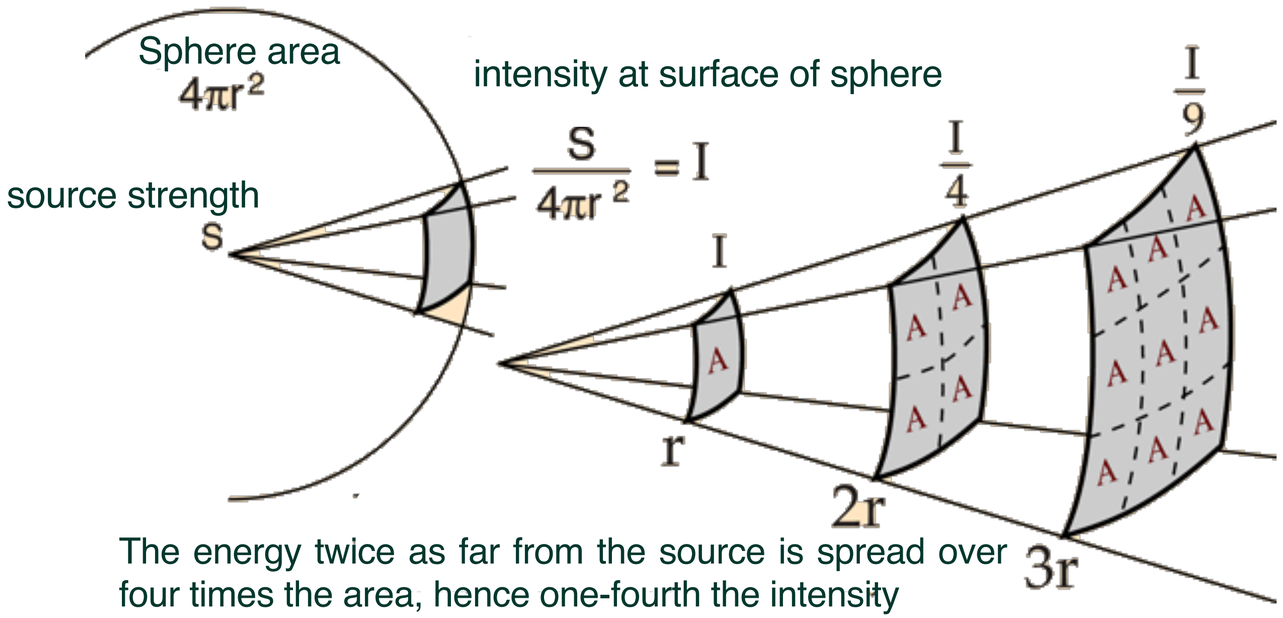

The energy twice as far from the source is spread over four times the area, hence one-fourth the intensity

Inverse Square Law

- This phenomenon is known as the *inverse square law*
- In simple terms: if you double the distance from the source, the sound becomes four times less intense; if you triple the distance, it is nine times less intense
- Essentially, the intensity changes by the square of the reciprocal of the distance change

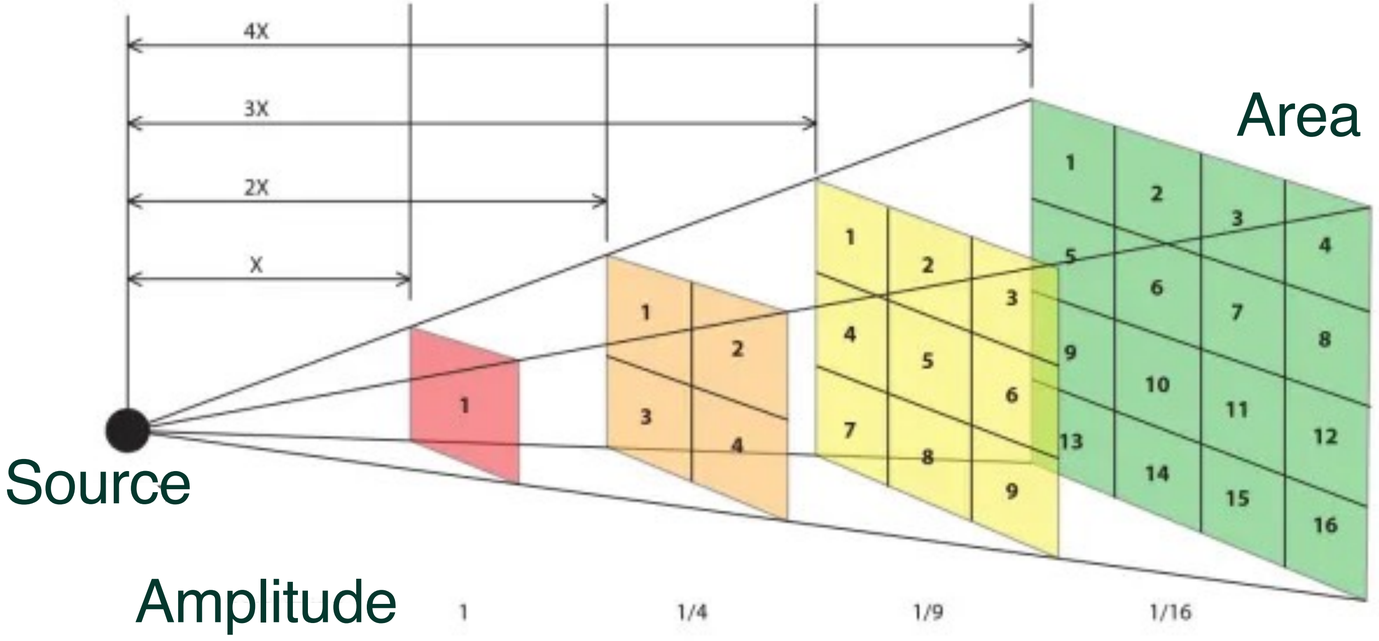

Inverse Square Law ☛ Example

- If the sound intensity of a screaming baby were $10^{-2}\ \mathrm{W/m^2}$ at $2.5\ \mathrm{m}$ away and we want to determine what would it be at $6\ \mathrm{m}$ away, the reasoning is as follows
- the distance from the source of sound is greater by a factor of $6.0/2.5 = 2.4$
- the sound intensity is decreased by $1/2.4^2 = 0.174$
- the new sound intensity is $10^{-2}\ \mathrm{W/m^2} \cdot 0.174 = 1.74 \times 10^{-3}\ \mathrm{W/m^2}$

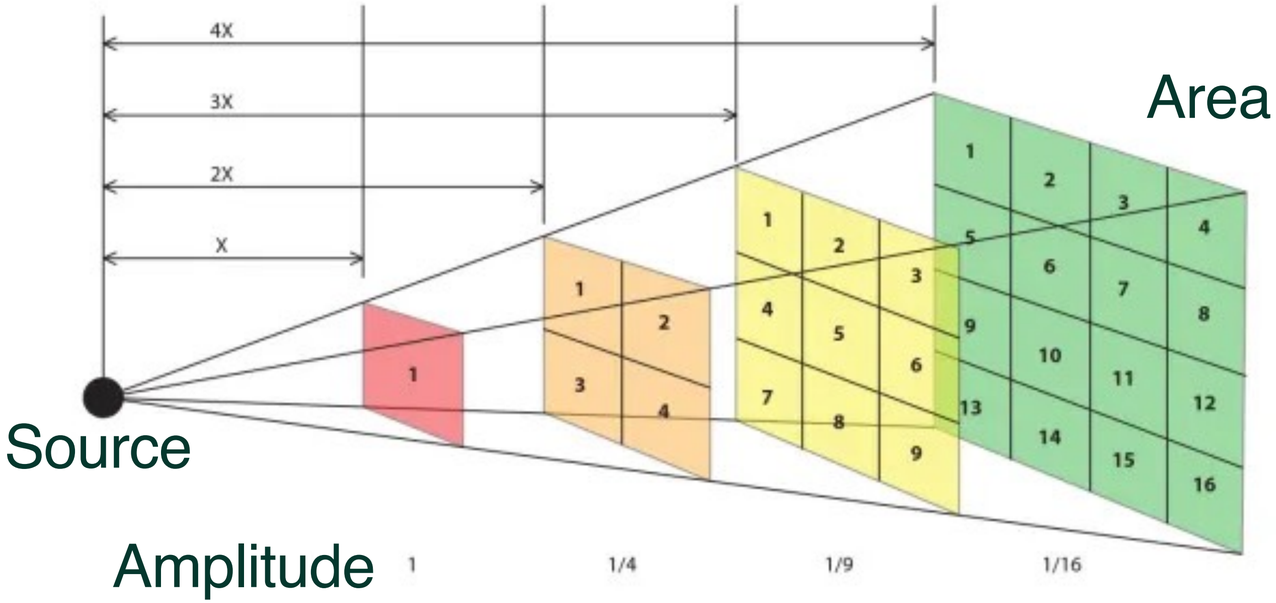

Source Power

- Now, to calculate the total power output of a sound source, we multiply its sound intensity (in Watts per square meter) by the surface area of the sphere to which the sound has spread

- For the baby produces a sound intensity of $10^{-2}\ \mathrm{W/m^2}$ at a distance of $2.5\ \mathrm{m}$, the total power output is calculated by multiplying this intensity by the area of a sphere with a $2.5\ \mathrm{m}$ radius, i.e., $P = 0.785\ \mathrm{W}$

- The power output calculated $6\ \mathrm{m}$ away it is obviously the same, because the power output depends on the baby, not the position of the observer

- This means we can always equate the power outputs that are measured at different locations

$$P_1 = P_2 \Rightarrow I_1 r_1^2 = I_2 r_2^2$$

- It is easily seen that as the radius increases, the intensity decreases in inverse proportion to its square

Orchestral Sound

- A live orchestra fills a concert hall with rich sound, created by the unique vibrations of each individual instrument
- While the audience hears immense volume, the actual acoustic power is generated by the physical effort of the musicians—a finger pressing a piano key, air passing over a clarinet reed, or cymbals crashing together
- Surprisingly, only about $1\,\%$ of this input energy is converted into the actual sound wave emitted by the instrument
- However, because the human ear is incredibly sensitive, it requires very little energy to perceive sound
- For example, a full 75-piece orchestra actually produces a total output of approximately 67 watts

Intensity and Loudness at 10 m from the source

- To find the sound intensity level at $r = 10\ \mathrm{m}$, first calculate the sound intensity at that distance

$$I_{\text{orchestra}} = \frac{P_{\text{orchestra}}}{4\pi r^2} \approx 0.056\ \mathrm{W/m^2}$$

- The sound intensity level would then be ☛ $L = 10\log_{10}\left(\frac{I_{\text{orchestra}}}{I_0}\right) \approx 107.5\ \mathrm{dB}$

Orchestral Instrument	*L* (dB)
Violin (at its quietest)	34.8
Clarinet	76.0
Trumpet	83.9
Cymbals	98.8
Bass Drum (at its loudest)	103

Sound intensity levels (measured at $10\ \mathrm{m}$ away) for various instruments

In what units is sound intensity measured?

A. Decibels (dB)

B. Hertz (Hz)

C. Watts per square meter (W/m^2)

D. Meters (m)

In what units is sound intensity measured?

A. Decibels (dB)

B. Hertz (Hz)

C. Watts per square meter (W/m^2)

D. Meters (m)

What is the threshold of human hearing in the decibel scale

A. 0 (dB)

B. 10 (dB)

C. 20 (dB)

D. 30 (dB)

What is the threshold of human hearing in the decibel scale

A. 0 (dB)

B. 10 (dB)

C. 20 (dB)

D. 30 (dB)

How does the sound intensity change when you double the distance to the source?

A. It remains the same

B. It is reduced to half

C. It is reduced to one-fourth

D. It is doubled

[Hint: $\text{Intensity} = \dfrac{\text{Power}}{4\pi r^2}$]

How does the sound intensity change when you double the distance to the source?

A. It remains the same

B. It is reduced to half

C. It is reduced to one-fourth

D. It is doubled

[Hint: $\text{Intensity} = \frac{\text{Power}}{4\pi r^2}$]

How does doubling the intensity of a sound affects its decibel level?

A. It increases by 2 (dB)

B. It increases by 3 (dB)

C. It increases by 10 (dB)

D. It increases by 20 (dB)

[Hint: $\log_{10} 2 = 0.30103$]

How does doubling the intensity of a sound affects its decibel level?

A. It increases by 2 (dB)

B. It increases by 3 (dB)

C. It increases by 10 (dB)

D. It increases by 20 (dB)

[Hint: $\log_{10} 2 = 0.30103$]

How many clarinets would it take to equal the acoustic power of a pair of cymbals?

A. 1

B. 191

C. half a clarinet

D. quater of a clarinet

How many clarinets would it take to equal the acoustic power of a pair of cymbals?

A. 1

B. 191

C. half a clarinet

D. quater of a clarinet

How many clarinets would it take to equal the acoustic power of a pair of cymbals?

To find out how many times more powerful one sound is than another, first determine the difference between their sound intensity levels:

$$\Delta L = L_{\text{cymbals}} - L_{\text{clarinet}} = 98.8\ \text{dB} - 76\ \text{dB} = 22.8\ \text{dB}$$

Next we relate the decibel difference to the power ratio

Specifically, the relationship between a change in decibels (ΔL) and the ratio of acoustic powers (n) is given by ☛ $\Delta L = 10 \log_{10} n$

To solve for the number of clarinets, we rearrange the formula $n = 10^{\Delta L/10}$

Substituting for ΔL, we find that it would take 191 clarinets to match the acoustic power of the cymbals

How far would you have to be from the violin (when it's at its quietest) in order to barely detect its sound?

A. 5 m

B. 8 m

C. 10 m

D. 550 m

How far would you have to be from the violin (when it's at its quietest) in order to barely detect its sound?

A. 5 m

B. 8 m

C. 10 m

D. 550 m

How far would you have to be from the violin (when it's at its quietest) in order to barely detect its sound?

The **barely detectable** limit for human hearing is generally defined as the threshold of hearing, which corresponds to $0\ \mathrm{dB}$

Sound level decreases as you move further from a point source

The relationship between sound level in decibels and distance r is governed by

$$\Delta L = -10 \log \left[\left(\frac{r_2}{r_1} \right)^2 \right] = 20 \log \left(\frac{r_2}{r_1} \right)$$

Taking, $L_1 = 34.8\ \mathrm{dB}$ as the initial source level, $r_1 = 10\ \mathrm{m}$, and $L_2 = 0\ \mathrm{dB}$ as the target sound level, we rearrange the last equation to solve for

$$r_2 = r_1 10^{\Delta L/20} \simeq 550\ \mathrm{m}$$

If the sound emerges from the trumpet at $0.5\ \mathrm{m}$ from the trumpet player's ear, how many decibels does he experience during his trumpet solo?

A. 40 dB

B. 60 dB

C. 110 dB

D. 83.9 dB

If the sound emerges from the trumpet at $0.5\ \mathrm{m}$ from the trumpet player's ear, how many decibels does he experience during his trumpet solo?

A. 40 dB

B. 60 dB

C. 110 dB

D. 83.9 dB

If the sound emerges from the trumpet at $0.5\ \mathrm{m}$ from the trumpet player's ear, how many decibels does he experience during his trumpet solo?

The intensity of sound from a point source decreases with the square of the distance

In decibels this relationship is expressed as ☛ $L_2 = L_1 + 20\log_{10}\left(\frac{r_1}{r_2}\right)$

where $L_1 = 83.9\ \mathrm{dB}$is the initial sound level, $r_1 = 10\ \mathrm{m}$ is the initial distance,

and $r_2 = 0.5\ \mathrm{m}$ is the new distance

Plug the given values in the last equation to obtain $110\ \mathrm{dB}$

1. If the orchestra conductor wanted to produce the sound intensity of the entire orchestra, but use only violins (at their quietest) to produce the sound, how many would need to be used?

2. How about if it were to be done with bass drums (at their loudest)? sound emerges from the trumpet at $0.5\ \mathrm{m}$ from the trumpet player's ear, how many decibels does he experience during his trumpet solo?

1.

A. 1

B. 2

C. 5

D. 17.7 million

2.

A. 3

B. 10

C. 100

D. 1000

1. If the orchestra conductor wanted to produce the sound intensity of the entire orchestra, but use only violins (at their quietest) to produce the sound, how many would need to be used?

2. How about if it were to be done with bass drums (at their loudest)? sound emerges from the trumpet at $0.5\ \mathrm{m}$ from the trumpet player's ear, how many decibels does he experience during his trumpet solo?

1.

A. 1

B. 2

C. 5

D. 17.7 million

2.

A. 3

B. 10

C. 100

D. 1000

1. If the orchestra conductor wanted to produce the sound intensity of the entire orchestra, but use only violins (at their quietest) to produce the sound, how many would need to be used?

To determine how many violins or bass drums are needed to match the sound intensity of an entire orchestra, we must compare their sound power

Sound power is an additive property, meaning the total power of n identical sources is simply n times the power of a single source

Let's first calculate a single violin power

The intensity leve of a single violin at its quietest is $L = 34.8\ \mathrm{dB}$ at a distance of $10\ \mathrm{m}$

We first find the sound intensity I using the reference intensity $I_0 = 10^{-12}\ \mathrm{W/m^2}$,

$$L = 10\log_{10}\left(\frac{I}{I_0}\right) \Rightarrow I = I_0 10^{L/10} \approx 3\times 10^{-9}\ \mathrm{W/m^2}$$

1. If the orchestra conductor wanted to produce the sound intensity of the entire orchestra, but use only violins (at their quietest) to produce the sound, how many would need to be used?

Assuming the violin radiates sound spherically, the sound power P_{violin} is calculated by multiplying intensity by the surface area of a sphere $(4\pi r^2)$ at $r = 10\ \text{m}$,

$$P_{\text{violin}} = I \cdot 4\pi r^2 \approx 3.79 \times 10^{-6}\ \text{W}$$

The total power for a 75-piece orchestra is $P_{\text{orchestra}} = 67\ \text{W}$, so the number of violins needed is

$$n_{\text{violins}} = P_{\text{orchestra}} / P_{\text{violins}} = 17{,}678{,}100$$

i.e., the orchestra conductor would need approximately 17.7 million violins played at their quietest to match the power of the full orchestra

2. How about if it were to be done with bass drums (at their loudest)? sound emerges from the trumpet at $0.5\ \mathrm{m}$ from the trumpet player's ear, how many decibels does he experience during his trumpet solo?

A bass drum at its loudest typically produces a sound intensity level of approximately

$$L = 103\ \mathrm{dB}\ \textbf{at}\ 10\ \mathrm{m}$$

We can use the same logic to find its power $P_{\mathrm{drum}} \approx 25\ \mathrm{W}$

and the number of drums $n_{\mathrm{drum}} = P_{\mathrm{orchestra}}/P_{\mathrm{drum}} \approx 2.7$

i.e., the orchestra conductor would need approximately 3 bass drum at its loudest to match the power of the full orchestra

The conductor has become concerned about the high decibel level and wants to make sure he does not experience more than 100~dB. How far away from the orchestra must he stand?

A. 1 m

B. 5 m

C. 9 m

D. 23 m

The conductor has become concerned about the high decibel level and wants to make sure he does not experience more than 100~dB. How far away from the orchestra must he stand?

A. 1 m

B. 5 m

C. 9 m

D. 23 m

The conductor has become concerned about the high decibel level and wants to make sure he does not experience more than 100~dB. How far away from the orchestra must he stand?

First, we convert the desired decibel level $L = 100\ \mathrm{dB}$ into sound intensity I using the threshold of hearing I_0 as a reference

$$L = 10\log_{10}\left(\frac{I}{I_0}\right) \quad ☛ \quad I = 10^{L/10} I_0 = 0.01\mathrm{W/m}^2$$

Assuming the sound spreads uniformly in all directions (spherical propagation), we use the inverse square law for intensity $I = \dfrac{P}{4\pi r^2}$

Rearranging to solve for the distance $r = \sqrt{\dfrac{P}{4\pi I}} \approx 23\ \mathrm{m}$